

ELECTRICAL CHARACTERISTICS

Parameter	Symbol	Test Conditions	Min	Typ	Max	Unit
Off characteristics						
Drain to Source Breakdown Voltage	V_{DSS}	V_{GS}=0V,I_D=250μA	650	-	-	V
Drain to Source Leakage Current	I_{DSS}	V_{DS}=650V,V_{GS}=0V	-	-	1	μA
Gate to Source Forward Leakage	$I_{GSS(F)}$	V_{DS}=0V, V_{GS}=+30V	-	-	100	nA
Gate to Source Reverse Leakage	$I_{GSS(R)}$	V_{DS}=0V, V_{GS}=-30V	-	-	-100	nA
On characteristics						
Drain to Source On-Resistance	$R_{DS(ON)}$	V_{GS}=10V,I_D=5A	-	0.67	0.75	Ω
Gate Threshold Voltage	$V_{GS(TH)}$	V_{DS}=V_{GS},I_D=250μA	2	-	4	V
Dynamic characteristics						
Gate capacitance	R_g	V_{GS}=0V,V_{DS}=0V ,f=1.0MHz	-	2.5	-	Ω
Forward Transconductance	g_{fs}	V_{DS}=10V,I_D=3A	-	8	-	S
Input Capacitance	C_{iss}	V_{DS}=25V,V_{GS}=0V f=1.0MHz	-	1700	-	pF
Output Capacitance	C_{oss}		-	124	-	pF
Reverse Transfer Capacitance	C_{rss}		-	3.3	-	pF
Resistive Switching Characteristics						
Turn-on Delay Time	$t_{d(ON)}$	I_D=10 A, V_{DS}=325V R_G=10Ω ,V_{GS}=10V	-	27	-	ns
Rise Time	t_r		-	22	-	ns
Turn-off Delay Time	$t_{d(OFF)}$		-	53	-	ns
Fall Time	t_f		-	24	-	ns
Total Gate Charge	Q_g	I_D=10 A, V_{DS}=325V V_{GS}=10V	-	29	-	nC
Gate to Source Charge	Q_{gs}		-	8	-	nC
Gate to Drain("Miller") Charge	Q_{gd}		-	12	-	nC
Source-Drain Diode Characteristics						
Continuous Source Current(Body Diode)	I_S		-	-	10	A
Maximum Pulsed Current(Body Diode)	I_{SM}		-	-	40	A
Diode Forward Voltage	V_{SD}	I_{SD}=1A, V_{GS}=0V	-	0.7	1.2	V
Reverse Recovery Time	t_{rr}	I_{SD} =10 A, T_J=25 dI/dt=100A/μs	-	528	-	ns
Reverse Recovery Charge	Q_{rr}		-	3220	-	nC

TYPICAL CHARACTERISTICS

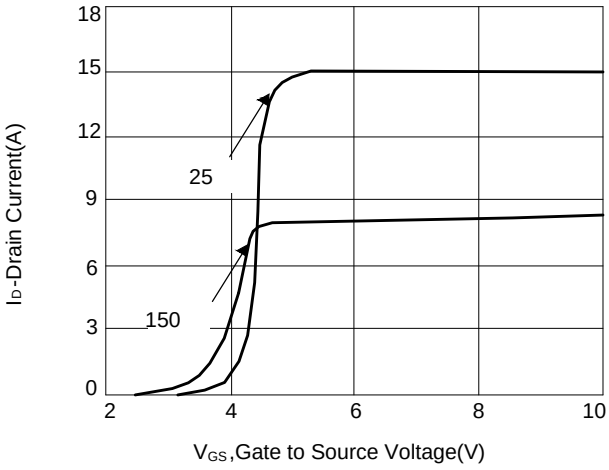

Figure 1: Transfer Characteristics

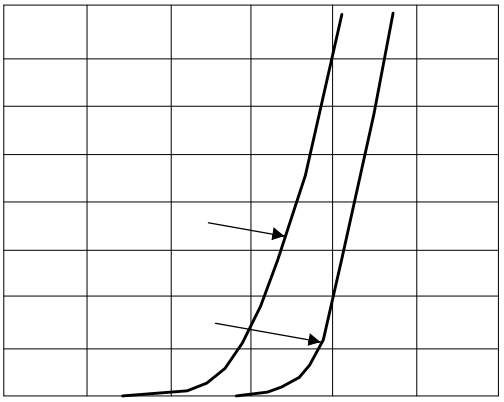

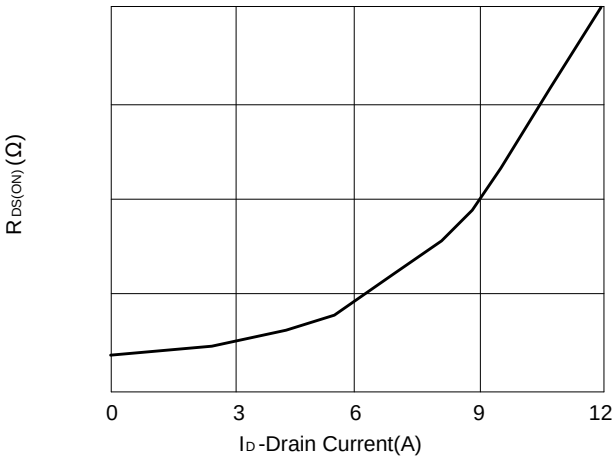

Figure 3: Drain to Source On-Resistance vs Drain Current

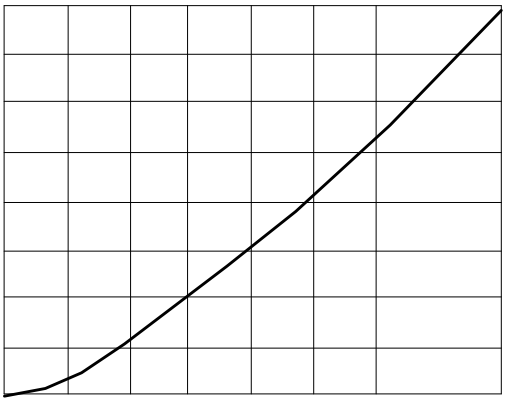

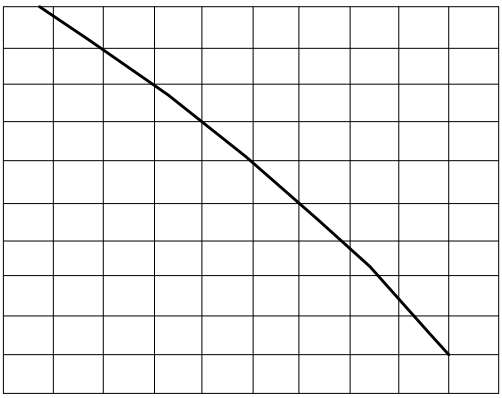

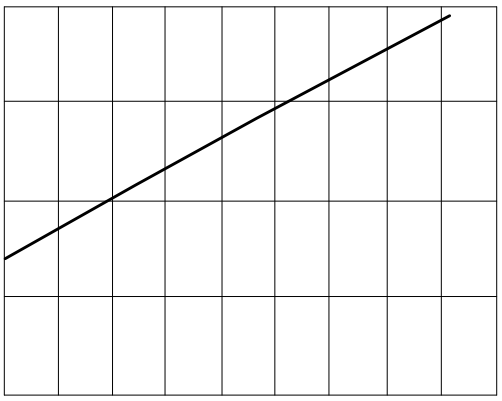

TYPICAL CHARACTERISTICS(Cont.)

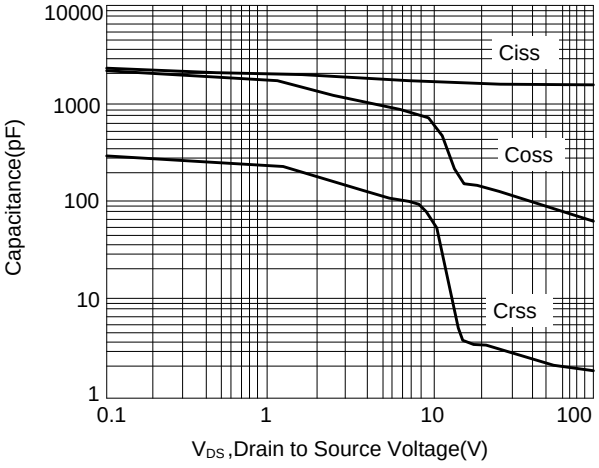

Figure 7: Capacitance vs Drain to Source Voltagfe

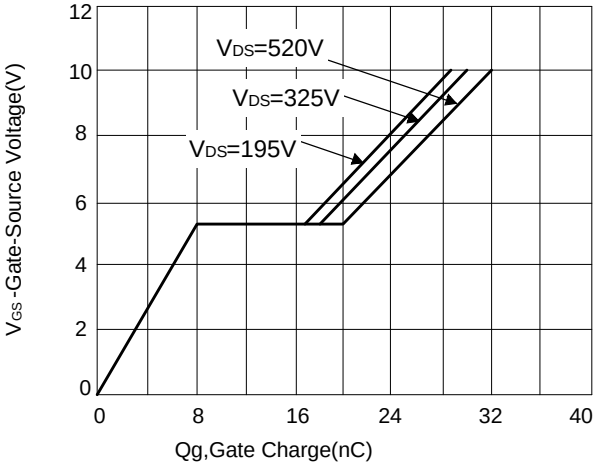

Figure 8: Gate Charge vs Gate to Source Voltage

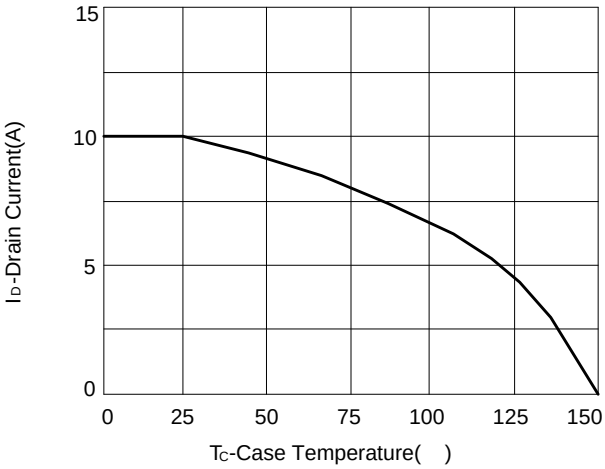

Figure 9: Continuous Drain vs Case Temperature

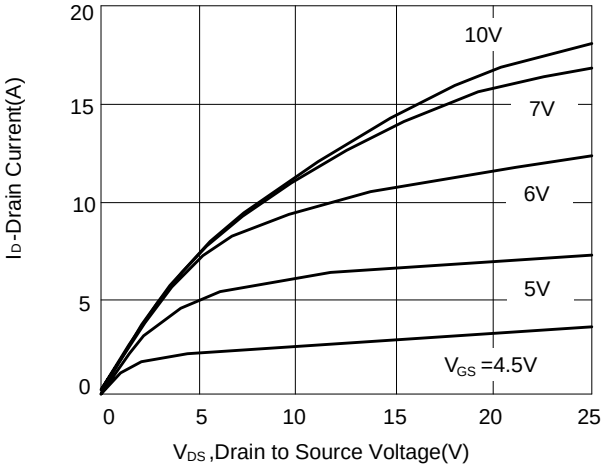

Figure 10: Output Characteristics

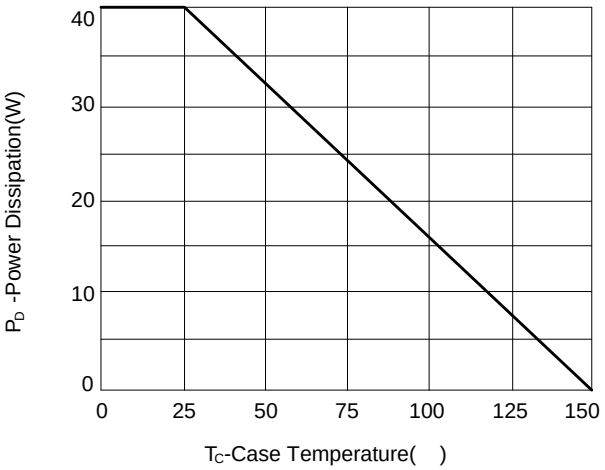

Figure 11: Power Dissipation vs Case Temperature

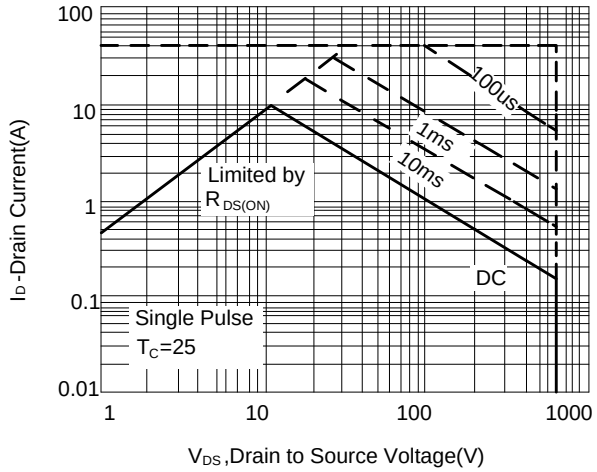

Figure 12: Safe operating Area

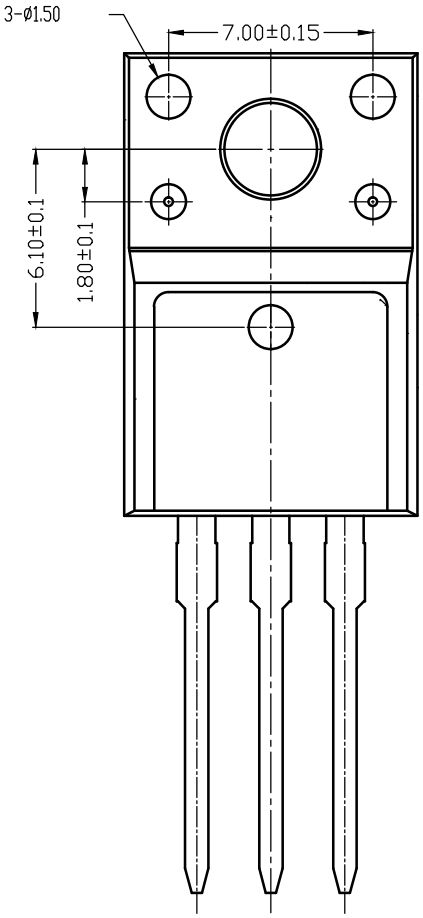
3-Ø1.50
7.00±0.15
6.10±0.1
1.80±0.1